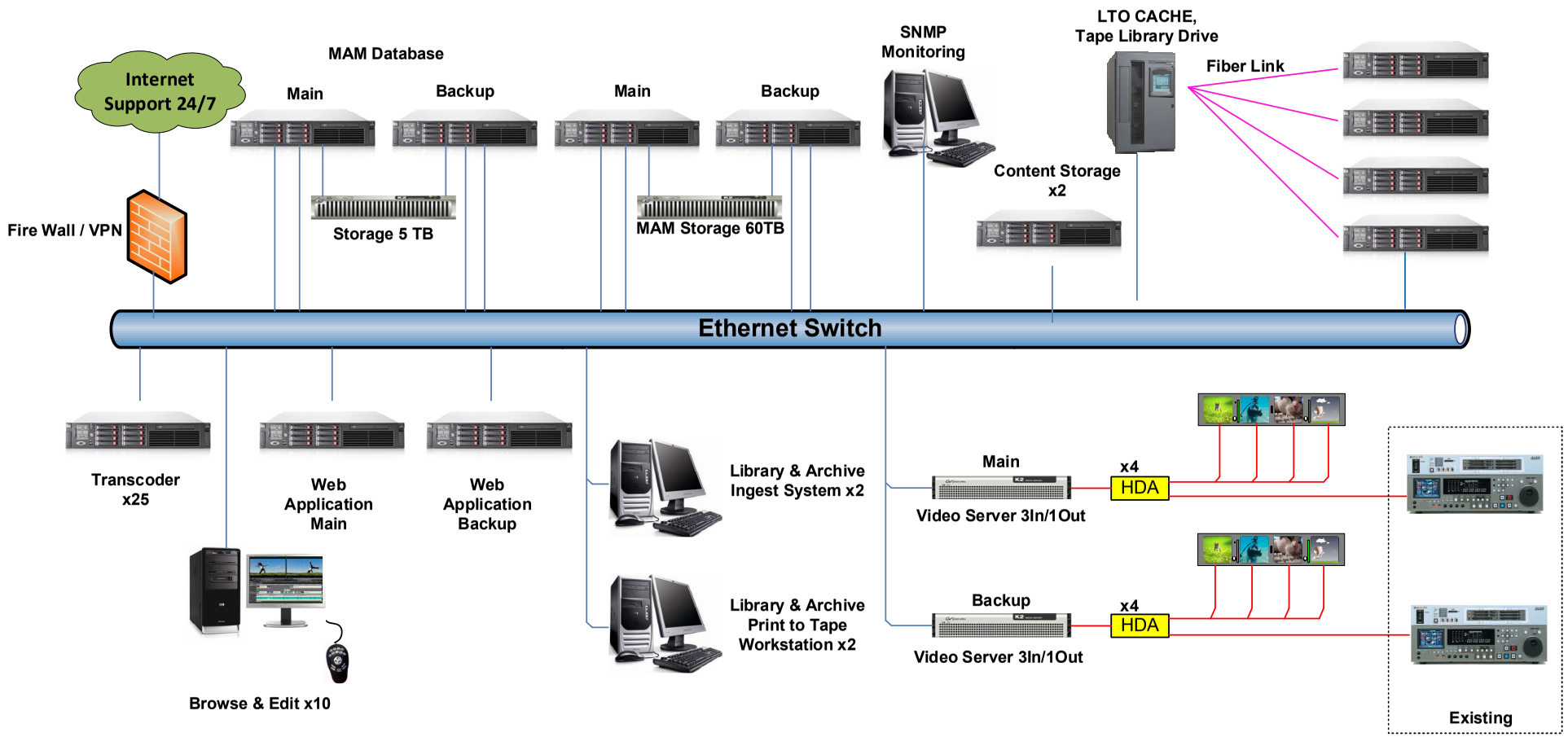

STRONG BROTHERS 1961 CO.,LTD.

361 Bangna-Trad road, Bangna, Bangkok 10260

สถานีโทรทัศน์ ทีวีไทย

	EDIT BY	DATE
1	-	-
2	-	-
3	-	-
4	-	-

TITLE: Media Asset Management System

DATE:	DWG. NO.	SCALE:	DRAWN BY:	SIZE:
20MAY10	03	NTS	P.Nawin	A4

FULL FILENAME: D:\DATA BEAR 24FEB2553\STRONG\PROJECT\THAI PBS 2553\THAI PBS MAM\DIAGRAM\MAM TPBS DIAGRAM 21MAY2553.VSD

CHECKED BY:

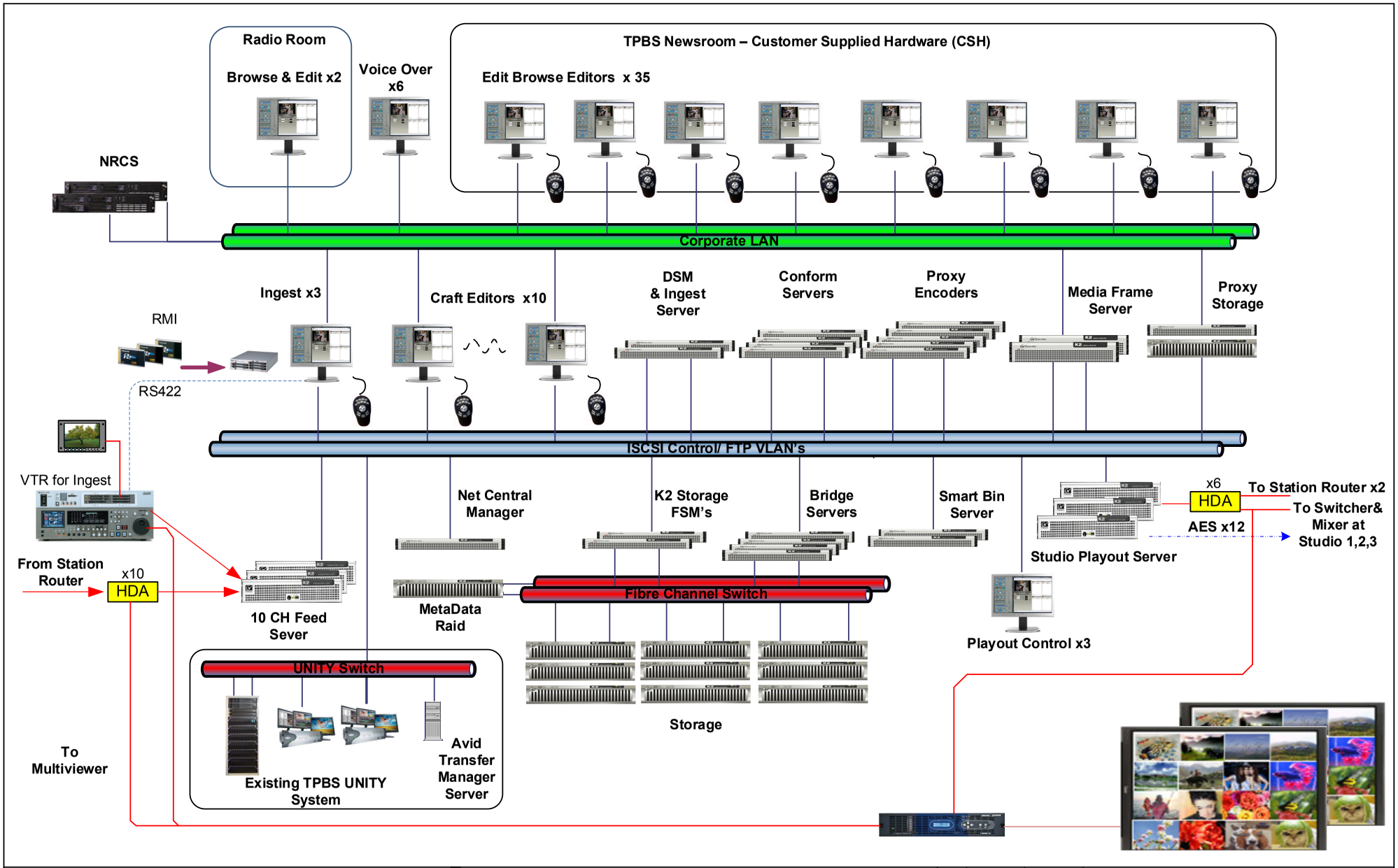

STRONG BROTHERS 1961 CO.,LTD.

361 Bangna-Trad road, Bangna, Bangkok 10260

สถานีโทรทัศน์ ทีวีไทย

	EDIT BY	DATE
1	-	-
2	-	-
3	-	-
4	-	-

TITLE: NEWS PRODUCTION SYSTEM

DATE:	DWG. NO.	SCALE:	DRAWN BY:	SIZE:
20MAY10	04	NTS	P.Nawin	A4

FULL FILENAME: D:\DATA BEAR 24\FEB2553\STRONG\PROJECT\THAI PBS 2553\THAI PBS MAM\DIAGRAM\MAM TPBS DIAGRAM 21MAY2553.VSD

CHECKED BY:

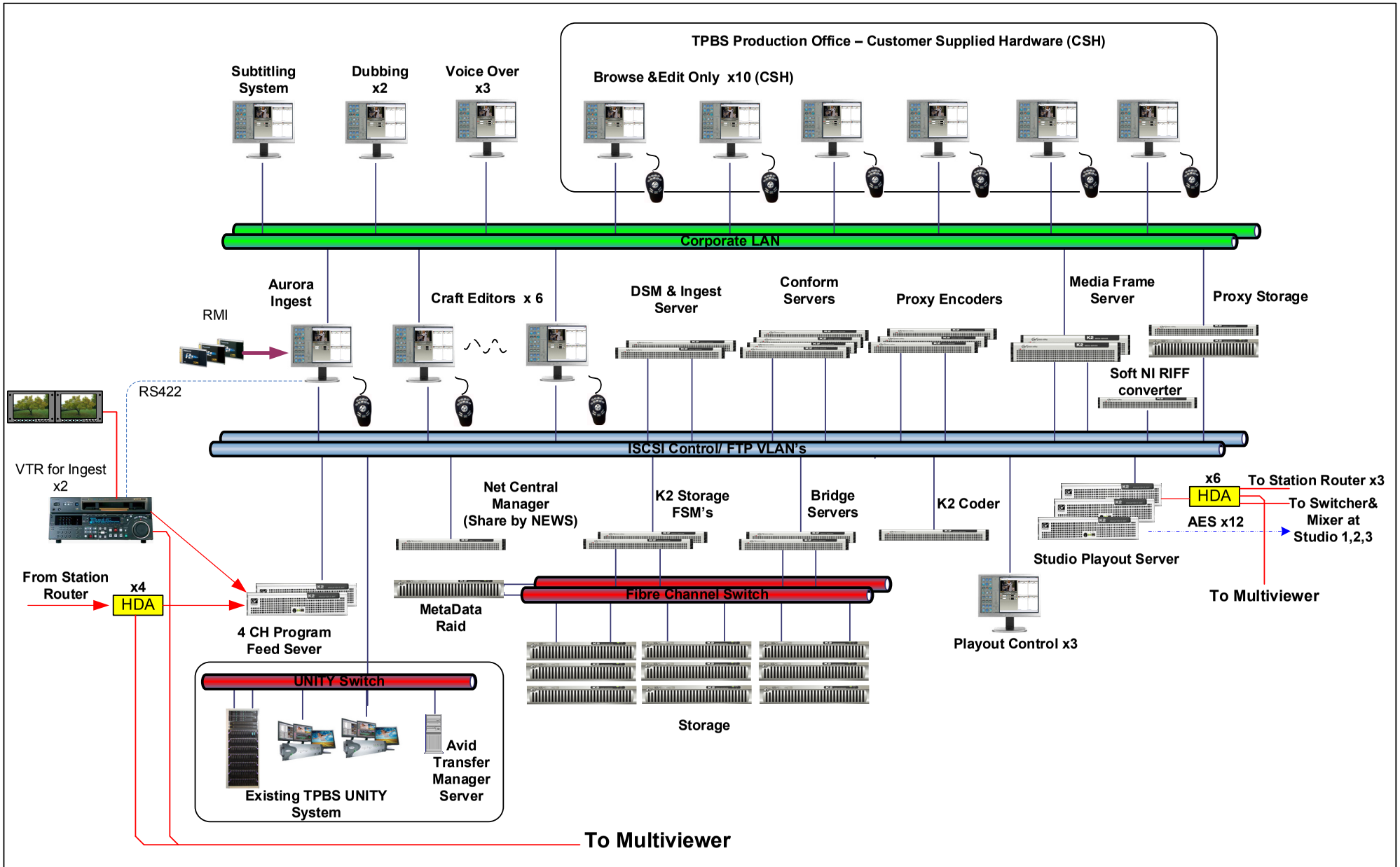

STRONG BROTHERS 1961 CO.,LTD.

361 Bangna-Trad road, Bangna, Bangkok 10260

สถานีโทรทัศน์ ทีวีไทย

	EDIT BY	DATE
1	-	-
2	-	-
3	-	-
4	-	-

TITLE: PROGRAM PRODUCTION SYSTEM

DATE:	DWG. NO.	SCALE:	DRAWN BY:	SIZE:
20MAY10	05	NTS	P.Nawin	A4

FULL FILENAME: D:\DATA BEAR 24FEB2553\STRONG\PROJECT\THAI PBS 2553\THAI PBS MAM\DIAGRAM\MAM TPBS DIAGRAM 21MAY2553.VSD

CHECKED BY:

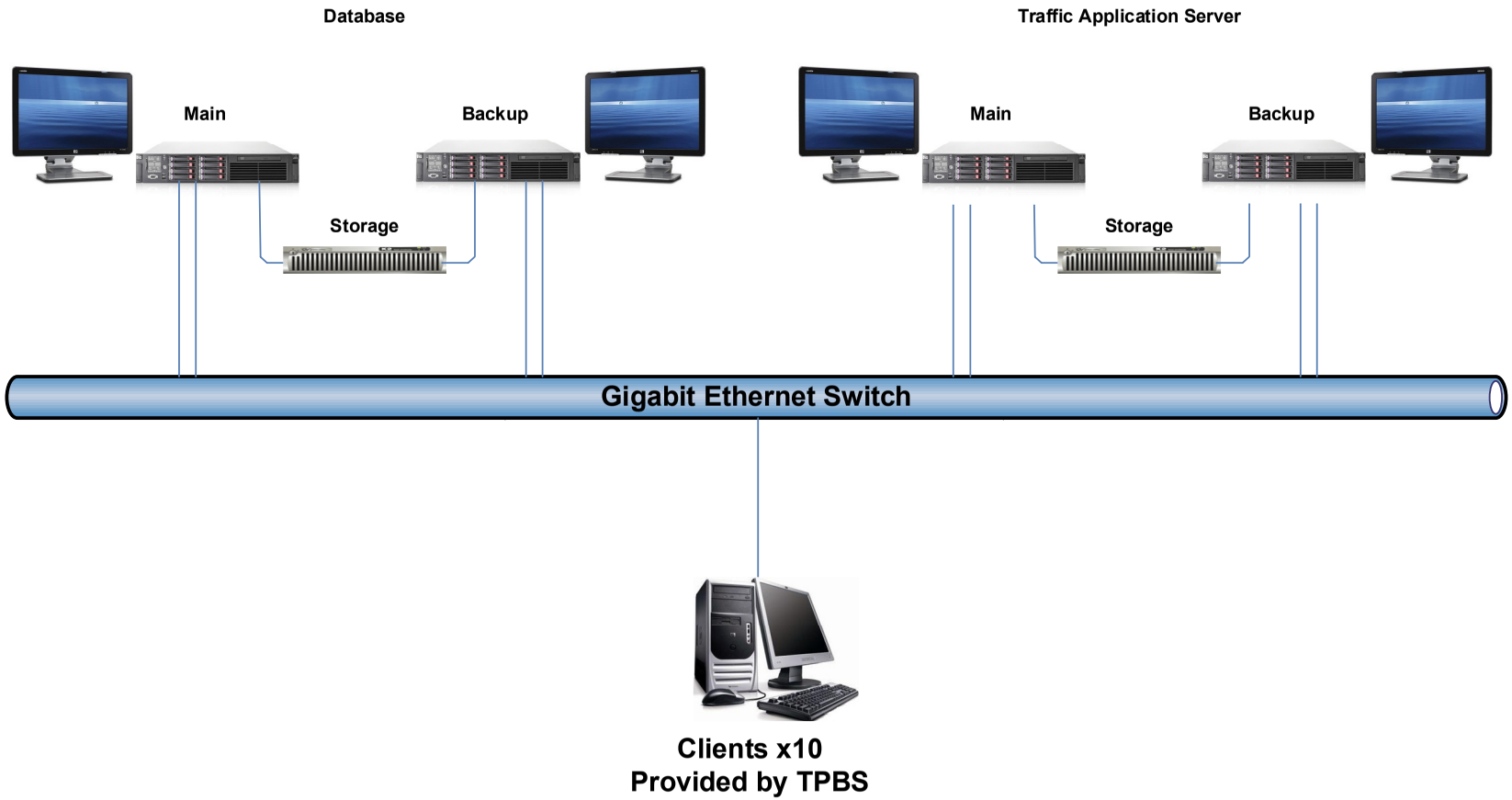

STRONG BROTHERS 1961 CO.,LTD.

361 Bangna-Trad road, Bangna, Bangkok 10260

สถานีโทรทัศน์ ทีวีไทย

	EDIT BY	DATE
1	-	-
2	-	-
3	-	-
4	-	-

TITLE: Broadcast Management System

DATE:	DWG. NO.	SCALE:	DRAWN BY:	SIZE:
20MAY10	06	NTS	P.Nawin	A4

FULL FILENAME: D:\DATA BEAR 24FEB2553\STRONG\PROJECT\THAI PBS 2553\THAI PBS MAM\DIAGRAM\MAM TPBS DIAGRAM 21MAY2553.VSD

CHECKED BY:

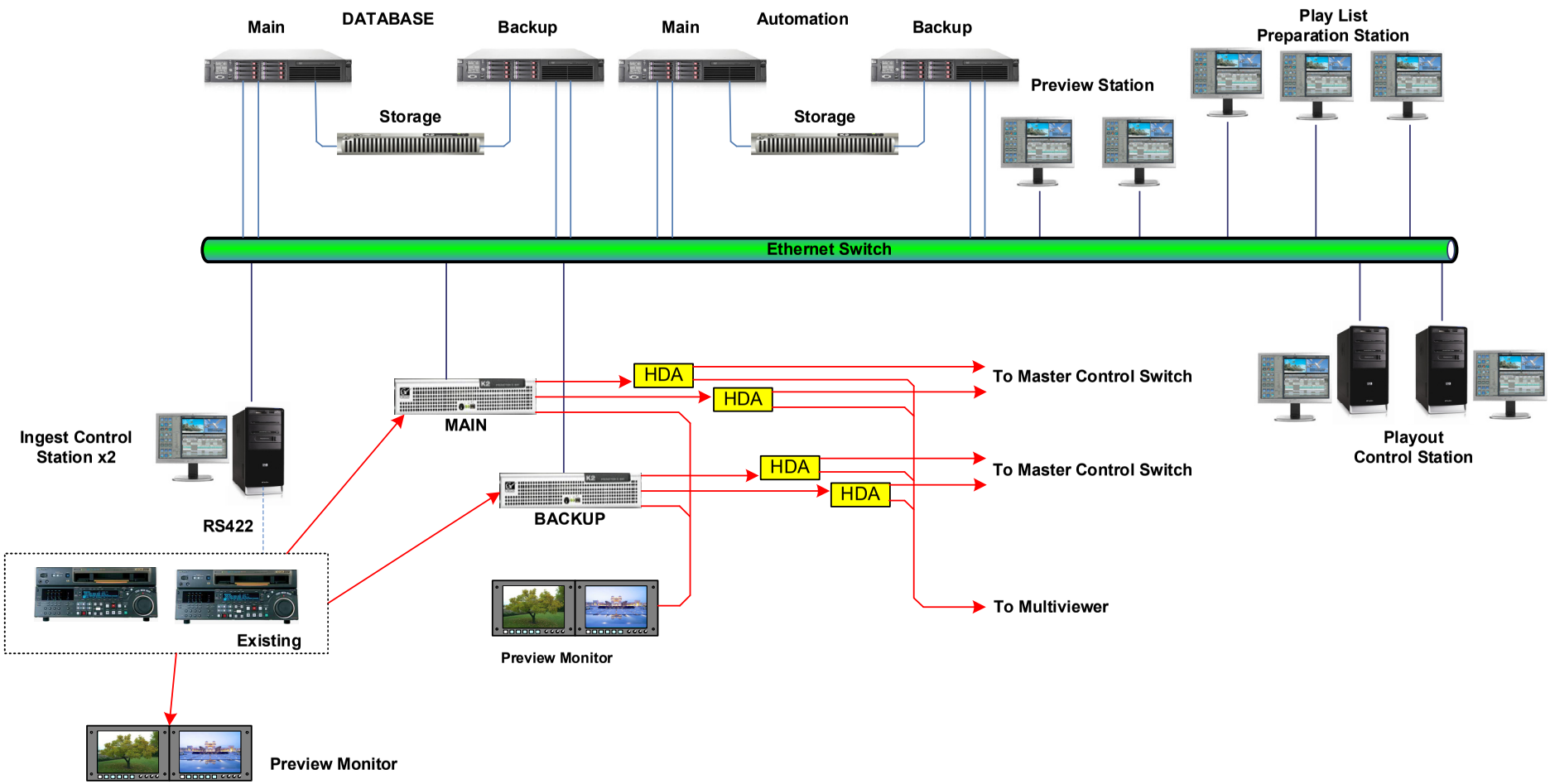

STRONG BROTHERS 1961 CO.,LTD.

361 Bangna-Trad road, Bangna, Bangkok 10260

สถานีโทรทัศน์ ทีวีไทย

	EDIT BY	DATE
1	-	-
2	-	-
3	-	-
4	-	-

TITLE: On-Air Automation System

DATE:	DWG. NO.	SCALE:	DRAWN BY:	SIZE:
20MAY10	07	NTS	P.Nawin	A4

FULL FILENAME: D:\DATA BEAR 24FEB2553\STRONGPROJECT\THAI PBS 2553\THAI PBS MAM\DIAGRAM\MAM TPBS DIAGRAM 21MAY2553.VSD

CHECKED BY:

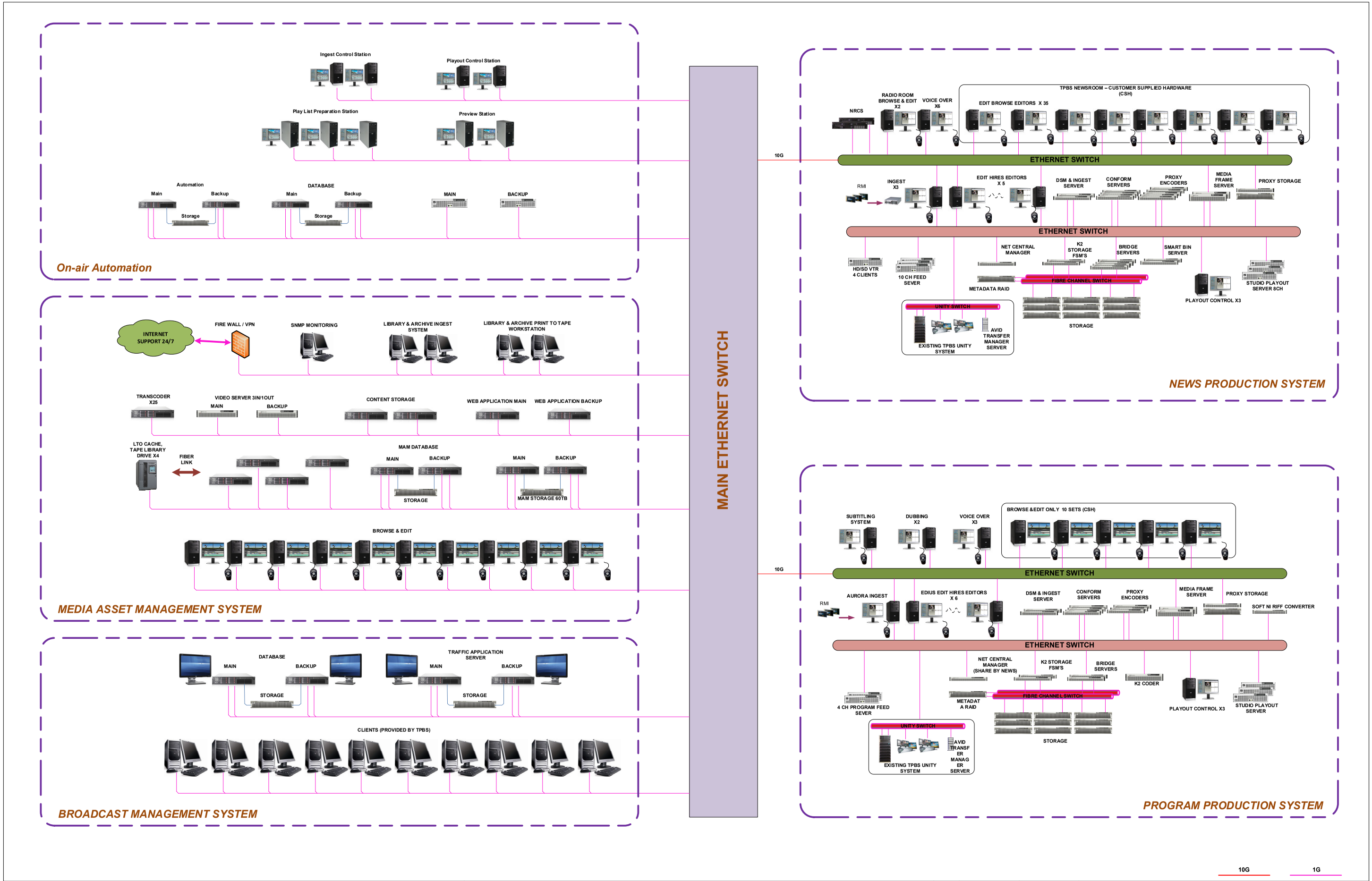

STRONG BROTHERS 1961 CO.,LTD.
361 Bangna-Trad road, Bangna, Bangkok 10260

สถานีโทรทัศน์ ทีวีไทย

	EDIT BY	DATE
1	-	-
2	-	-
3	-	-
4	-	-

TITLE: Ethernet Switch System

DATE:	DWG. NO.	SCALE:	DRAWN BY:	SIZE:
20MAY10	08	NTS	P.Nawin	A1

FULL FILENAME: D:\DATA BEAR 24FEB2553\STRONG\PROJECT\THAI PBS 2553\THAI PBS MAM\DIAGRAM\MAM TPBS DIAGRAM 21MAY2553.VSD

CHECKED BY:

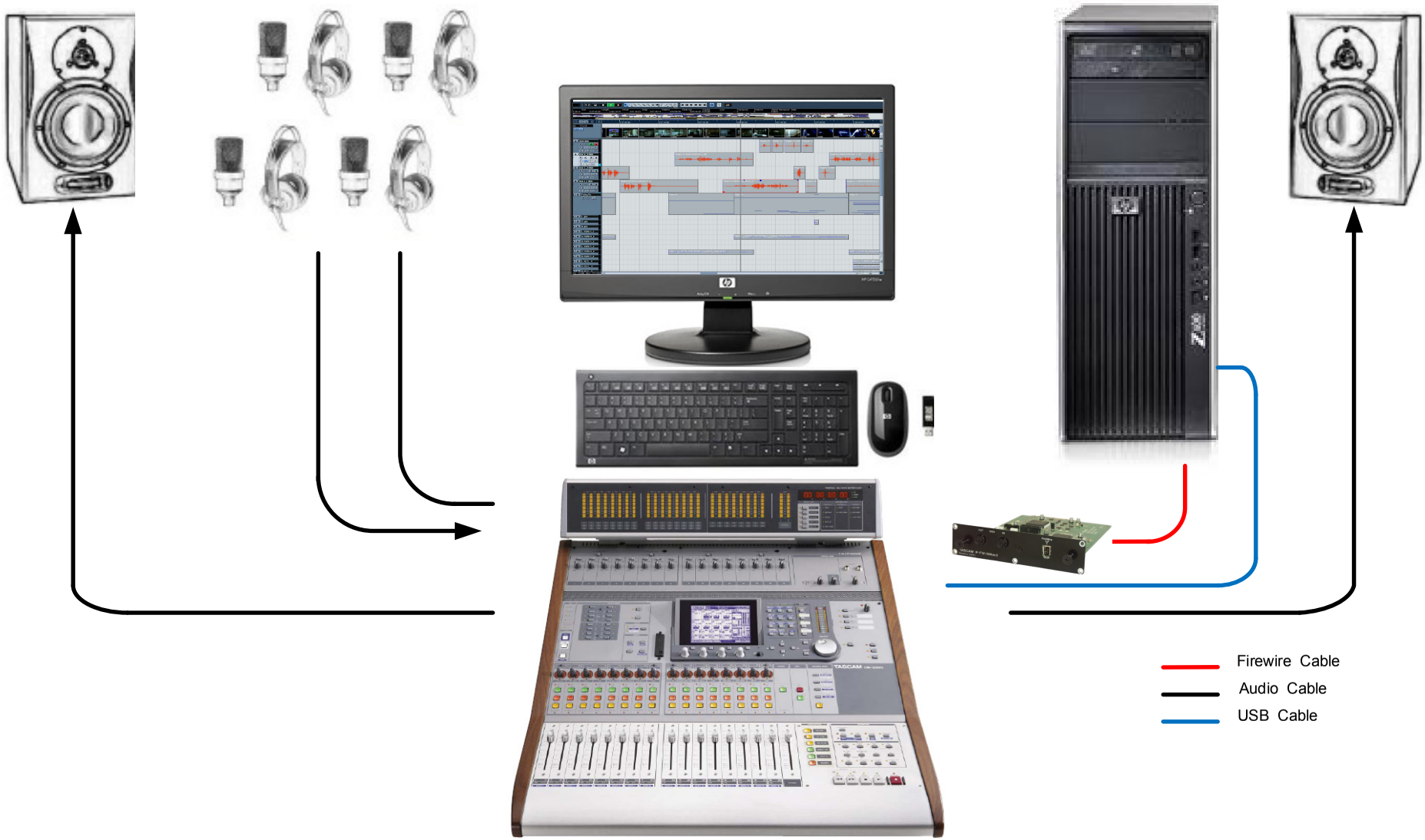

STRONG BROTHERS 1961 CO.,LTD.

361 Bangna-Trad road, Bangna, Bangkok 10260

สถานีโทรทัศน์ ทีวีไทย

	EDIT BY	DATE
1	-	-
2	-	-
3	-	-
4	-	-

TITLE: Audio Dubbing System

DATE:	DWG. NO.	SCALE:	DRAWN BY:	SIZE:
20MAY10	09	NTS	P.Nawin	A4

FULL FILENAME: D:\DATA BEAR 24FEB2553\STRONG\PROJECT\THAI PBS 2553\THAI PBS MAM. DIAGRAM\MAM TPBS DIAGRAM 21MAY2553.VSD

CHECKED BY:

STRONG BROTHERS 1961 CO.,LTD.

361 Bangna-Trad road, Bangna, Bangkok 10260

สถานีโทรทัศน์ ทีวีไทย

	EDIT BY	DATE
1	-	-
2	-	-
3	-	-
4	-	-

TITLE: Voice Over Room 1-3

DATE:	DWG. NO.	SCALE:	DRAWN BY:	SIZE:
20MAY10	10	NTS	P.Nawin	A4

FULL FILENAME: D:\DATA BEAR 24FEB2553\STRONG\PROJECT\THAI PBS 2553\THAI PBS MAM. DIAGRAM\MAM 1\PBS DIAGRAM 2 19MAY2553.VSD

CHECKED BY: